PART № 1-23

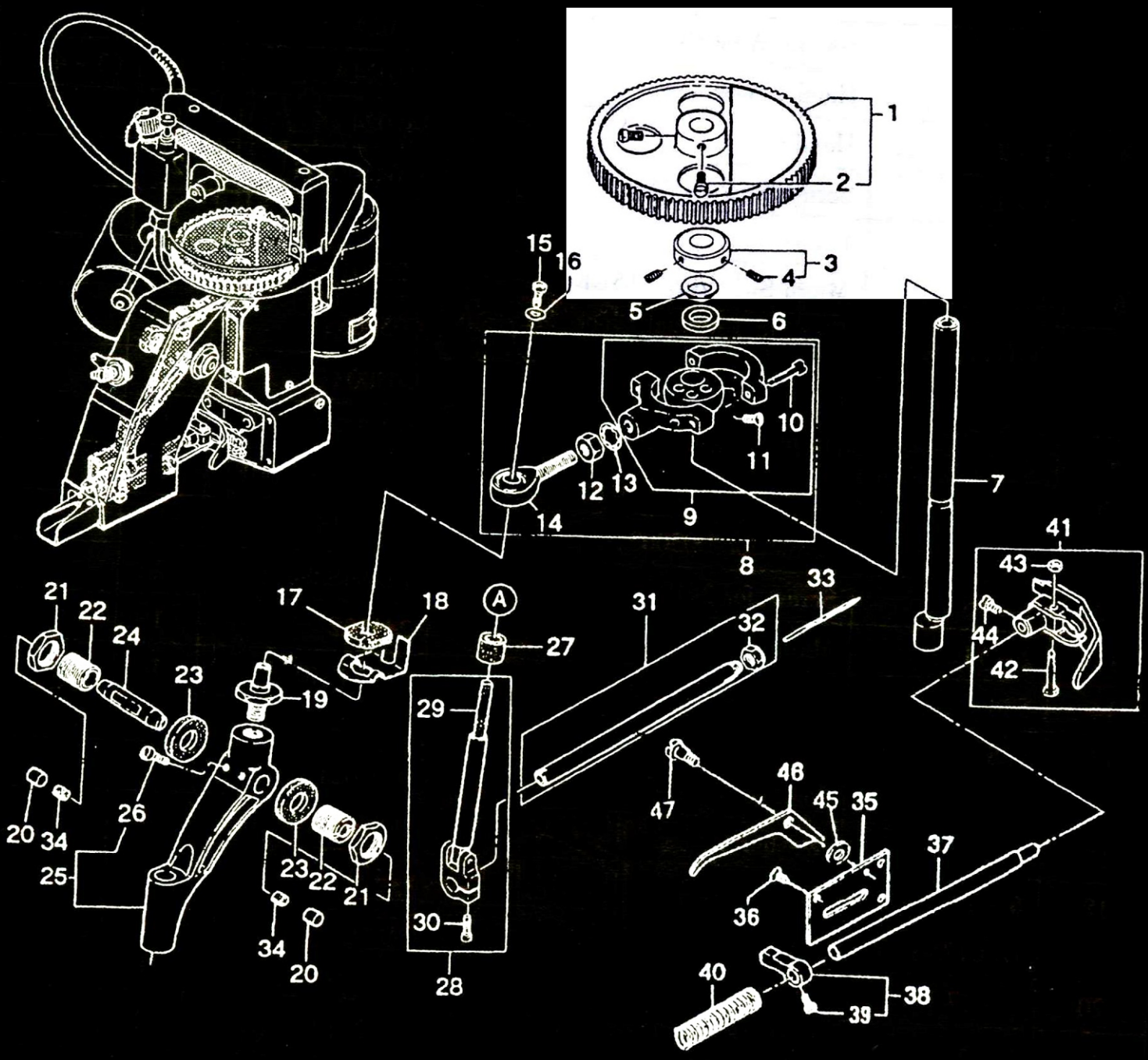
1
2
3
4
5
6
7
8
9
10
11
12
13
14
15
16
17
18
19
20
21
22
23
24
25
26
27
28
29
30
31
32
33
34
35
36
37
38
39
40
41
42
43
44
45
46
47
A

Ref No.	Part No.	Description	Part No. NP－7	Q'ty	Remarks
1	1－23	Synchro Pulley	241092	1	
2	S30	Screw, for 241092	11/64S40	2	
3	2－13	Retaining Collar	241131	1	
4	GS55	Screw, for 241131	11/64S40502	2	
5	2－10	Spacer	241161	1	
6	2－9	Oil Felt	205131	1	
7	2－12	Main Shaft	241102	1	
8		Connecting Rod Assembly	242011A	1	
9	2－8－1	Connecting Rod Sub－Assembly	242011	1	
10	2－8－2	Screw, for connecting rod cap	3/16S28029	2	
11	GS55	Screw, for eccentric cam	11/64S40001	2	
12	GB6175－86	Nut, for 242011A	1N8	1	
13	GB861·2－87	Washer, for 242011A	5W8	1	
14	2－8－5	Rod End(POS－8)	6A04001	1	
15	4－11	Screw, for 242031	11/64S40084	1	
16	GB95－85	Washer, for 242031	11/64W15103	1	
17	2－15	Oil Felt	245211	1	
18	2－14	Spring	242041	1	
19	2－16	Rod End Stud	242031	1	
20		Cap	245491	2	
21	2－19	Nut, for 242081	5/8N18101	2	
22	2－18	Adjusting Stud	242081	2	
23	2－21	Oil Felt	245231	2	
24	2－20	Needle Bar Lever Stud	242071	1	
25	2－7	Needle Bar Lever Assembly	242051A	1	
26	S30	Screw, for 242051A	11/64S40004	2	
27	2－3－3	Oil Felt	245371	1	
28	2－3－1 2－3－2 2－3－4	Needle Bar Connection Assembly	242101A	1	
29	2－3－5	Oil Felt	205171	1	
30	GS55	Screw, for 242101A	11/64S40003	1	
31	2－1	Needle Bar with Nut	242121A	1	
32	2－5	Needle Clamp Nut	242131	1	
33	2－6	Needle(DN×1 #25)	B01002	1	
34		Oil Felt	065561	2	
35	5－5	Presser Foot Lifter Base	242172	1	
36	S47	Screw, for 242172	11/64S40002	3	
37	5－9	Presser Bar	242201	1	
38	5－7	Presser Bar Connection	242181	1	
39	GS55	Screw, for 242181	11/64S40003	1	
40	5－6	Presser Spring	242191	1	
41		Presser Foot Assembly	242231A	1	
42	5－2	Screw	9/64S40055	1	
43	5－1	Nut	9/64N40101	1	
44	GS55	Screw, for 242231A, 242233A	11/64S40005	1	
45	5－13	Washer		1	
46	5－12	Presser Foot Lifter	242161	1	
47	5－14	Screw, for 242161		1	