PART № 6-15

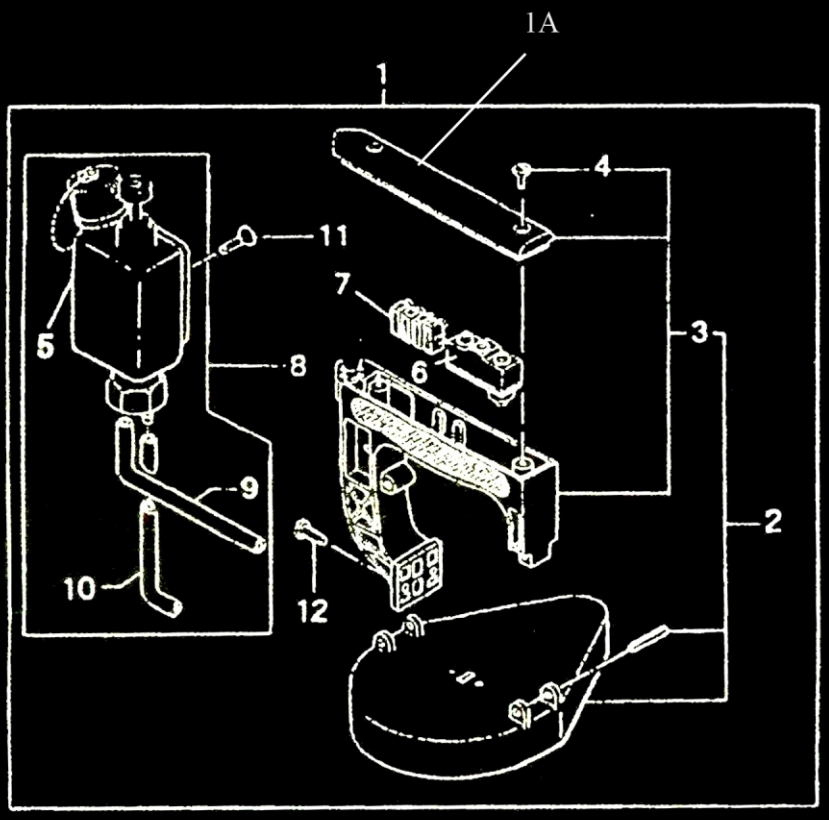
1A
1
4
11
7
3
5
8
6
9
2
10
12

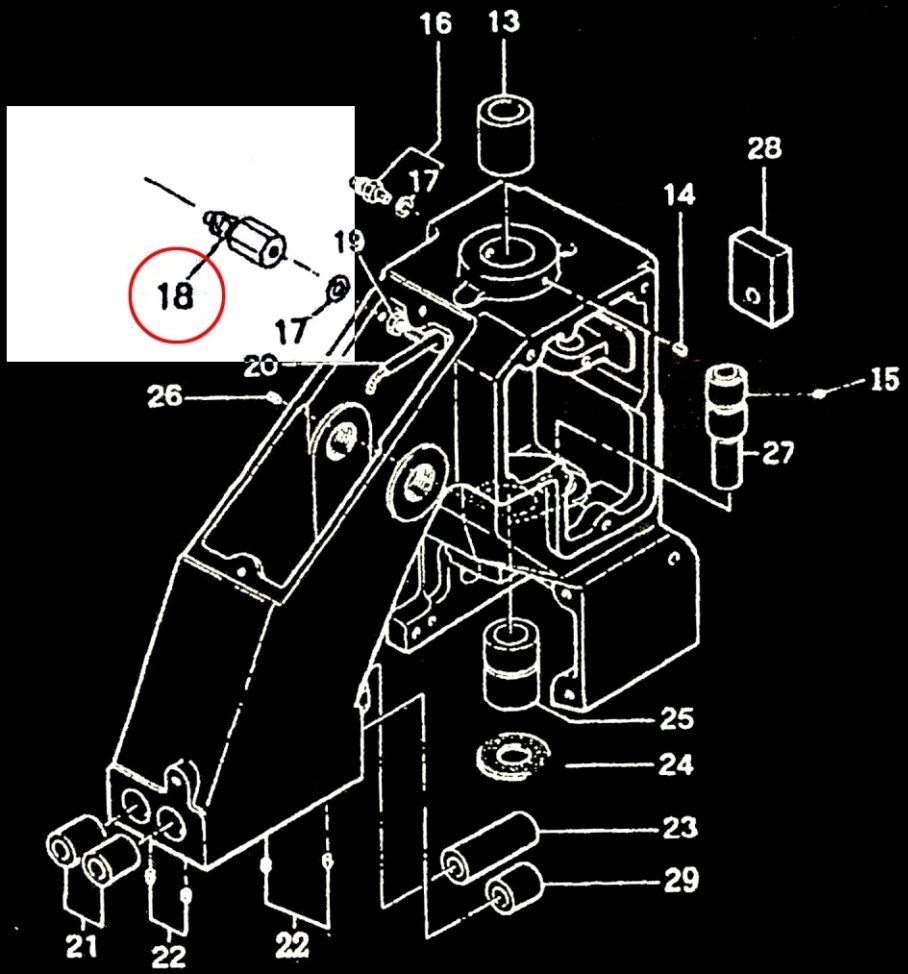
16
13
17
28
14
19
18
17
20
15
26
27
25
24
23
29
21
22
22

Ref No.	Part No.	Description	Part No. NP – 7	Q'ty	Remarks
1A	1 - 0	Handle Assembly	241024AS	1	
2	BC-1-2	Handle Assembly	241024A	1	(3 – 4)
3	1 – 2	Handle	241024	1	
4	1 – 18	Screw, for 241024A	9/64S40011	2	
5A	1-2-2	Pulley Cover	241212	1	
6	Lx5 – 11/D	Micro Switch(Z – 15GK655 – B)	C02001	1	
7	$X_5C_0V_1{}^0A$	Flexible Terminal Block(ML - SK – 1,4P)	C05008	1	
8		Oiler	D03003	1	
9		Oil Tube, with oil felt	8EU2 – 6 × 90F	1	
10		Oil Tube, with oil felt	8FU2 – 6 × 60F	1	
11	GB68 – 85	Screw, for D03003	6S5 × 15	1	
12	1 – 36	Screw, for 241024A	15/64S28021	2	
13	2 – 11	Main Shaft Bushing, rear	241122	1	
14	S38	Screw, for 241122	11/64S40	1	
15	S38		11/64S40	1	
16	6 – 14	Joint(BN – 5 – 6)	D07021	1	
17	7 – 7	Washer	E03014	2	
18	6 – 15	Joint	245471	1	
19	GB6175 – 86	Nut	1N4	1	
20	6 – 17	Oil Pipe	245461	1	
21	2 – 2	Bushing for Presser Bar & Needle Bar, upper	242212	2	
22	S38	Screw, for 242212	11/64S40	4	
23	5 – 8	Presser Bar Bushing, lower	242222	1	
24	4 – 19	Oil Felt	245541	1	
25	2 – 22	Main Shaft Bushing, lower	241111	1	
26	S38	Screw, for 241111	11/64S40	1	
27	3 – 4	Looper Rocker Shaft Bushing	243021	1	
28	3 – 5	Oil Felt	245162	1	
29	2 – 4	Needle Bar	242212	1	