

GO 150-25

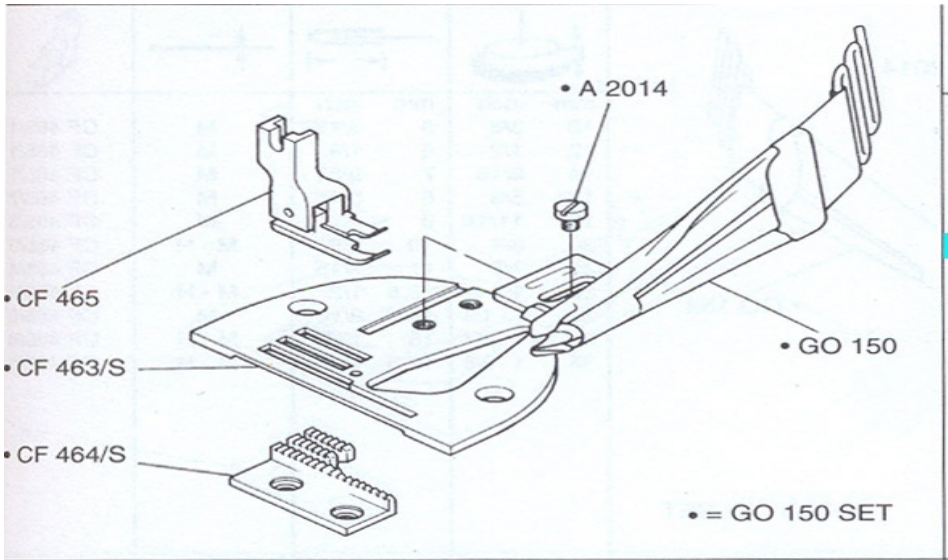

mm	inch	mm	inch		
13	1/2	3,5	1/8	M	CF 465/0
16	5/8	4	5/32	M	CF 465/0
18	11/16	4,5	11/64	M	CF 465/0
20	3/4	5	3/16	M and H	CF 465/1
22	7/8	6	1/4	M and H	CF 465/1
25	1	7	9/32	M and H	CF 465/1
28	1 - 1/8	8	5/16	M and H	CF 465/2
30	1 - 3/16	9	11/32	M and H	CF 465/3
32	1 - 1/4	10	3/8	M and H	CF 465/3
35	1 - 3/8	11	7/16	M and H	CF 465/4
40	1 - 9/16	12	15/32	M and H	CF 465/5
45	1 - 3/4	14	9/16	M and H	CF 465/6
50	2	16	5/8	M	CF 465/6

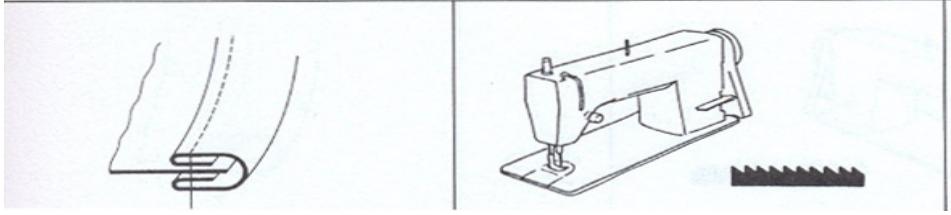

Head office: *5300 Gabrovo, Bulgaria, 9 Antim I Str., tel./fax: +35966 803206*
e-mail: office@nikisltd.com, www.nikisltd.com