PART №

3001233

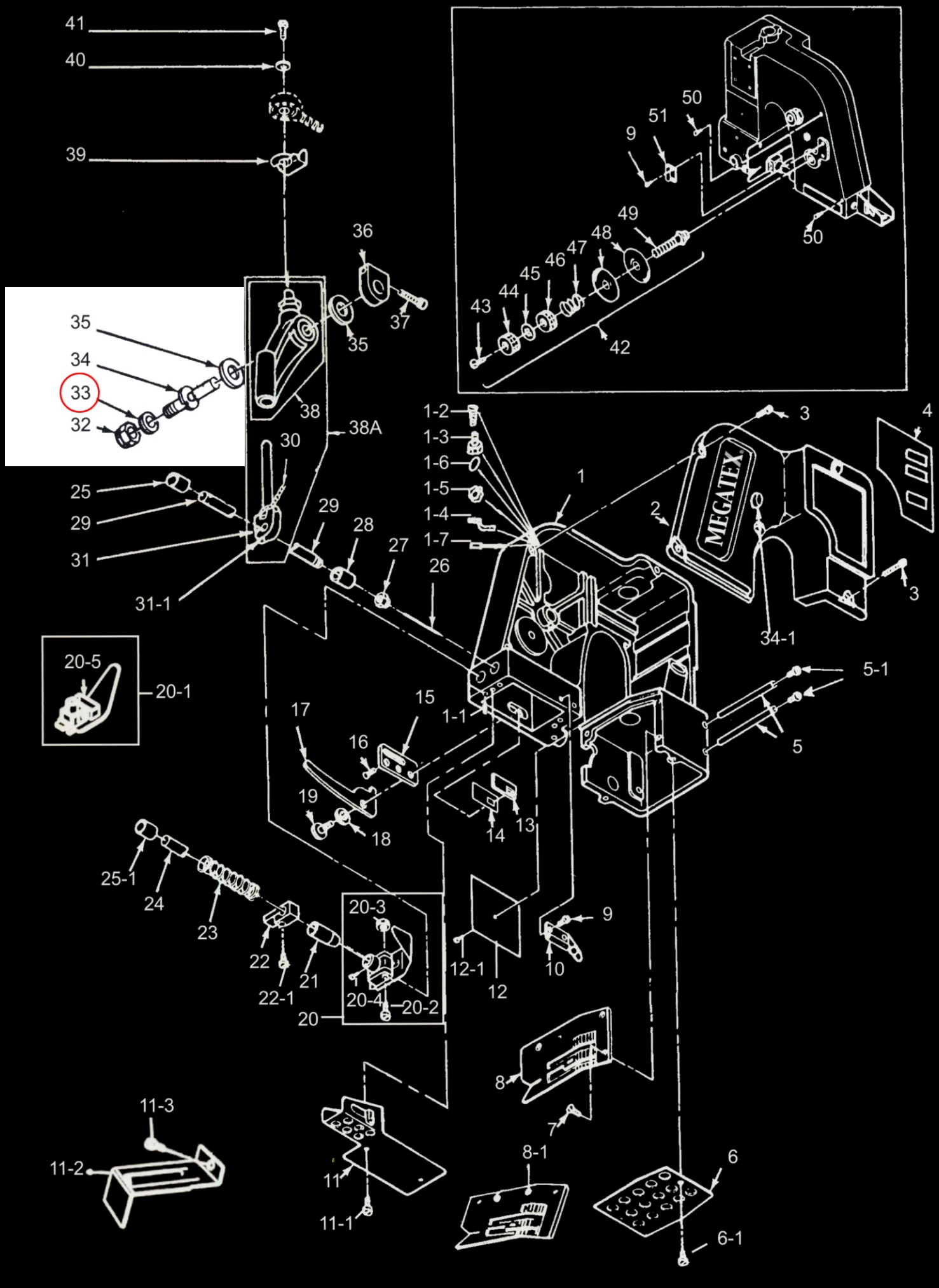

ITEM	QUAN.	PART NO.	DESCRIPTION
1	1	3001201	ASSY.,HOUSING & COVERW/BUSHINGS
1-1	9	3001201-1	SCREW,SOC.SET#8-32N.C.X3/16(SCREW FPR ALL BUSHINGS)
1-2	1	3001201-2	SPRING
1-3	1	6001218	JOINT
1-4	1	3001201-4	OIL PIPE
1-5	1	6001219	NUT
1-6	1	6001217	WASHER
1-7	1	3001201-7	OIL TUBE
2	1	3001202	COVER,HOUSING.(PART OF ITEM#1)
3	6	3001203	SCREW,FILLISTER HD,#8-32N.C.X5/8
4	1	3001204	NAMEPLATE
5	2	3001205	STUD,FEED DOG,CARRIER SLIDE
5-1	4	3001205-1	SCREW,SOC.BUTTON HD.-#10-32N.F.X1/4
6	1	3001206	COVER,LOOPER
6-1	1	3001206-1	STUD,LOOPER COVER
7	3	3001207	SCREW,FLATHD.-#6/40N.E.X3/8
8	1	3001208	PLATE,THROAT-STANDARD
8-1	1	3001208-1	PLATE,THROAT TAPING
9	4	3001209	SCREW,BINDING HD.-6/32N.C.X3/16
10	1	3001210	TUBE,THREAD GUIDE(FRONT)
11	1	3001211	GUARD,NEEDLE BAR
11-1	2	3001211-1	SCREW,BINDING HD.-#8-32N.C.X1/4
11-2		3001211-2	GUARD,NEEDLE BOB FOR CE
11-3	1	3001211-3	SCREW #8-32N.L.X3/8
12	1	3001212	PLATE,COVER
12-1	1	3001212-1	SCREW,BINDING HD.-#10-32N.E.X1/4
13	1	3001213	COVER,SLIDE PAD
14	1	3001214	PAD,SLIDE
15	1	3001215	PLATE,LEVER
16	2	3001216	SCREW,FLATHEAR-#8-32N.C.X5/16
17	1	3001217	LEVER,LIFTER-PRESSER FOOT
18	1	3001218	WASHER,SPRING
19	1	3001219	SCREW,PIVOT
20	1	3001220A	ASSY.,PRESSER FOOT
20-1	1	3001220A-1	PRESSER FOOT,TAPING & PLASTIC
20-2	1	3001220A-2	BOLT,HINGING
20-3	2	3001220A-3	NUT
20-4	1	3001220A-4	SCREW,SOC.SET-#8-32N.C.X3/16(FLAT POINT)
20-5	1	3001220A-5	BOLT,HINGING CE
21	1	3001221	BUSHING,LOWER
22	1	3001222	LIFTER,PRESSER FOOT
22-1	1	3001237	SCREW,SOCKET CAP-#6-40N.F.X1/2
23	2	3001223	SPRING,PRESSER BAR
24	1	3001224	PRESSER BAR
25	1	3001225	BUSHING,NEEDLE BAR & UPPER
25-1	1	3001225-1	BUSHING,PRESSER BAR-UPPER
26	1	3001226	NEEDLE
27	1	3001227	NUT,NEEDLE BAR
28	1	3001228	BUSHING,NEEDLE BAR-LOWER
29	1	3001229	NEEDLE BAR
30	1	3001230	OIL FELT
31	1	3001231	ASSY.,CLAMP-NEEDLE BAR
31-1	2	3001466-1	SCREW
32	1	3001232	NUT,LOCK(NYLOK SPECIAL)-3/8-24N.C.
33	1	3001233	WASHER,FLAT
34	1	3001234	PIN,PIVOT
34-1	1	3001234-A	BUSHING
35	5	3001235	WASHER,THRUST-NEEDLE LEVER
36	1	3001236	CLAMP,PIVOT-NEEDLE
37	2	3001237	SCREW,SOC.CAP-#6-40N.F.X5/8
38A	1	3001238A	ASSY,NEEDLE BAR LEVER WITH CLAMP
38	1	3001238	ASSY,CLAMP-NEEDLE BAR LEVER
39	1	3001239	SPRING
40	1	3001240	WASHER,FLAT-#10
41	1	3001241	SCREW,HEX HD.#10-32N.F.X1/2
42	1	3001242	ASSY,TENSION-COMPLETE
43	1	3001243	SCREW,HEX HD.-#6-40N.F.X3/8 (PART OF ITEM#42)
44	1	3001244	NUT TENSION-UPPER (PART OF ITEM#42)
45	1	3001245	WASHER,LOCK-TENSION (PART OF ITEM#42)
46	1	3001246	NUT TENSION-LOWER (PART OF ITEM#42)
47	1	3001247	SPRING,TENSION (PART OF ITEM#42)
48	2	3001248	DISC,TENSION (PART OF ITEM#42)
49	1	3001249	STUD,TENSION (PART OF ITEM#42)
50	2	3001250	EYELET,THREAD PULL OFF (PART OF ITEM#42)
51	1	3001251	TUBE,THREAD GUIDE-REAR (PART OF ITEM#42)