PART №

3001624-1

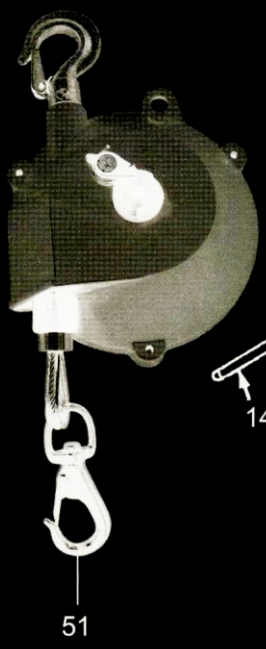

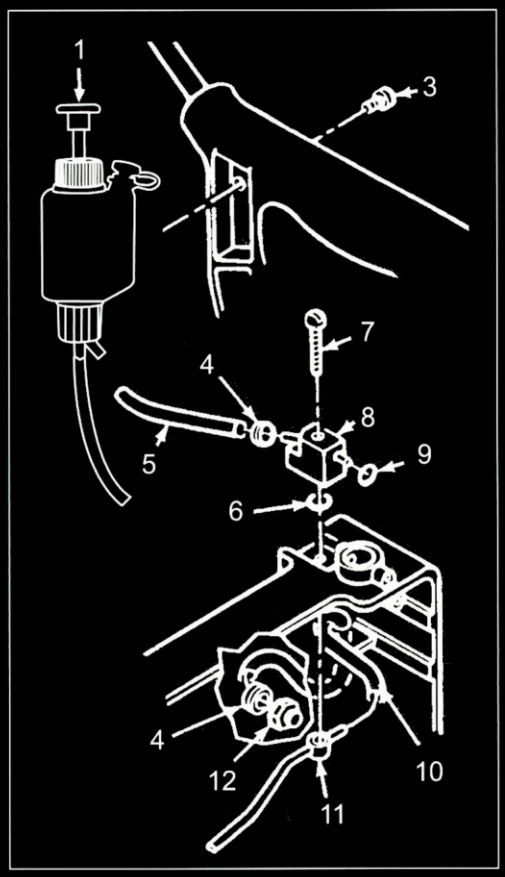

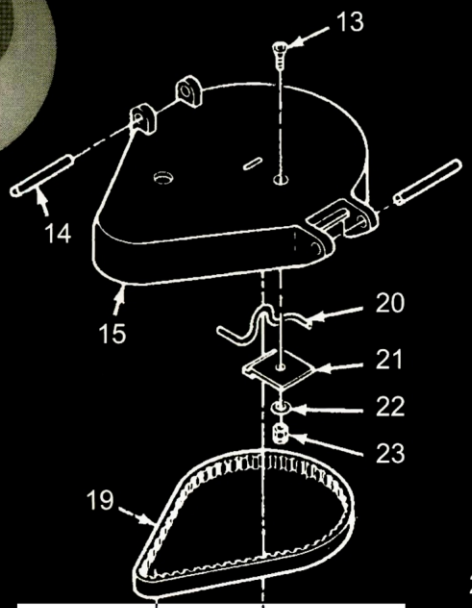

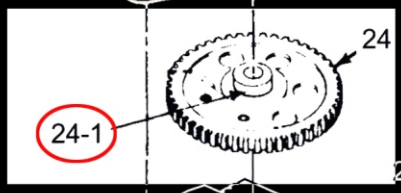

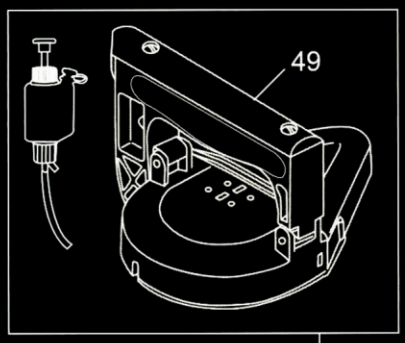

ITEM	QUAN.	PART NO.	DESCRIPTION
1	1	3001601	ASSY.,PUMP-OIL
3	1	3001603	SCREW,BINDING HD,#8-32N.C.X1/2
4	2	3001604	SPRING,GARTER
5	1	3001605	TUBING,OIL PUMP-PLASTIC(4X6X10.5)
5-1	1	3001605-1	TUBING,OIL PUMP-PLASTIC(4X6X20.5)
6	1	3001606	RING,"0"
7	1	3001607	SCREW BINDING HD,-#8-32N.C.X1/4
8	1	3001608	MANIFOLD,OUTSIDE
9	1	3001609	RING,"0"
10	1	3001610	TUBING,PLASTIC(4X6X11.5)
11	1	3001611	WELDMENT,MANIFOLD-INSIDE
12	1	3001612	FITTING,BARBED
13	1	3001216	SCREW,FLAT HD.-#8-32N.C.X5/16
14	2	3001614	PIN,SPRING-1/4DIA,X11/2
15	1	3001615	GUARD,BELT
19	1	3001619	BELT
20	1	3001620	HANGER
21	1	3001621	CLIP,HANGER
22	1	3001473	WASHER,INTERNAL TOOTH-#8
23	1	3001623	NUT,HEX-#8-32N.C.
24	1	3001624	PULLEY
24-1	2	3001624-1	#10-32NX 3/8 SCREW
25	2	3001625	SCREW,ROUND HD,#10-32N.F.X3/8
26	1	3001626	COVER,HANDLE
26-1	1	3001626-1	MICRO SWITCH COVER
26-2	1	3001626-2	FLEXIBLE TERMINAL BLOCK
27	1	3001627	SCREW,FILLISTER HD,#4-40NH.C.X3/4
28	1	3001628	SWITCH
28-1	2	3001628-1	END PLUG
29	4	3001629	WIRE NUT
30	1	3001630	CORD,SET FOR 110V
30-1	1	3001630-1	CORD,SET FOR 12V, 24V
30-2	1	3001630-2	CORD,SET FOR 220V, 240V "CE"
30-3	1	3001630-3	CORD,SET FOR 220V, 240V
31	2	3001631	SCREW,SOC.CAP-1/4-20N.C.X3/4
32	2	3001632	WASHER,SPRING-1/4
33	1	3001633	HANDLE
34	1	3001634	BOLE,THREAD-CLAMPING
34-1	1	3001634-1	THREAD
35	6	3001635	SCREW,SOC.FLAT HD-#10-32N.F.X3/8
36	1	3001636	STAIN RELEIF
37	1	3001637	MOTORLEAD-3 WIRE SJO
38	1	3001638	PULLEY MOTOR
38-1	2	3001638-1	SCREW
39	1	3001639	UNIVERSAL MOTOR ASM (110V)
	1	3001639-1	UNIVERSAL MOTOR ASM (220V)
	1	3001639-2	UNIVERSAL MOTOR ASM (12V)
	1	3001639-3	UNIVERSAL MOTOR ASM (240V)
	1	3001639-4	(UNIVERSAL MOTOR ASM (24V)
39-1	1	3001639M	UNIVERSAL MOTOR (110V)
	1	3001639-1M	UNIVERSAL MOTOR (220V)
	1	3001639-2M	UNIVERSAL MOTOR (12V)
	1	3001639-3M	UNIVERSAL MOTOR (240V)
	1	3001639-4M	UNIVERSAL MOTOR (24V)
40	1	3001640	STAND,THREAD
41	1	3001641	NUT,WING-1/4-20N.C.
42	1	3001642	ASSY.HINGE MOTOR MOUNT
43	4	3001643	SCREW,SEMS-PAN HD.
44	1	3001644	WASHER,FOR MOTOR
45	1	3001645	CARBON BRUSH FOR AC MOTOR(SIZE:6X8X15)
45-1	1	3001645-1	CARBON BRUSH FOR DC MOTOR(SIZE:6X8X15)
46	1	3001646	CAP FOR MOTOR
47	1	3001647	SCREW(WITH WASHER)
48	1	3001648	COMPLETE HANDLE WITH OILER
49	1	3001649	HANDLE COMPLETE
50	1	3001650	PULLEY SAFE LOWER GUARD COVER **(FOR CE) (OPTIONAL)**
51	1	SB-5K	SPRING BALANCER FOR 3-5KGS
51-1	1	SB-7K	SPRING BALANCER FOR 5-7KGS
51-2	1	SB-9K	SPRING BALANCER FOR 6-9KGS