PART №

6001219

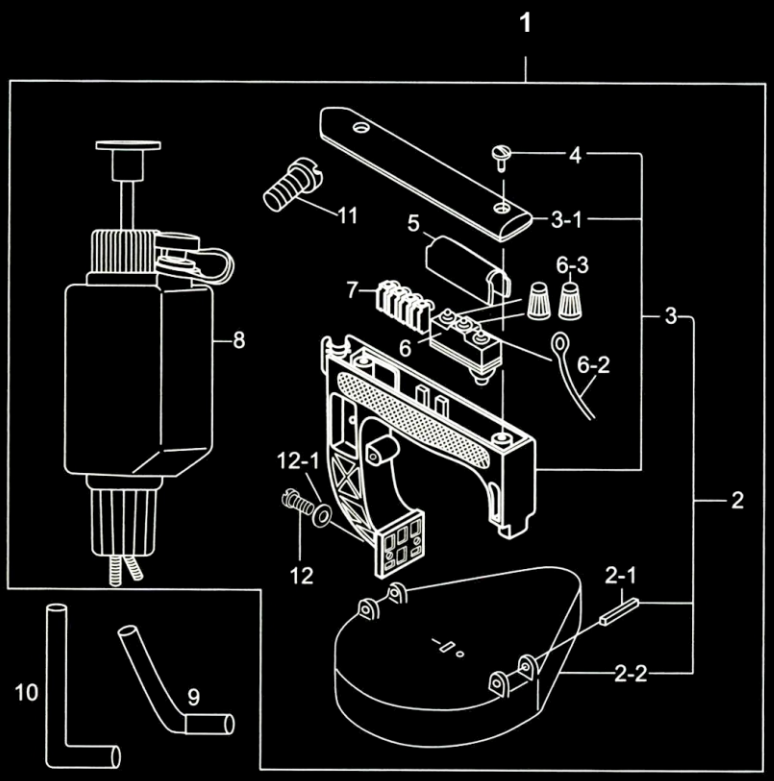

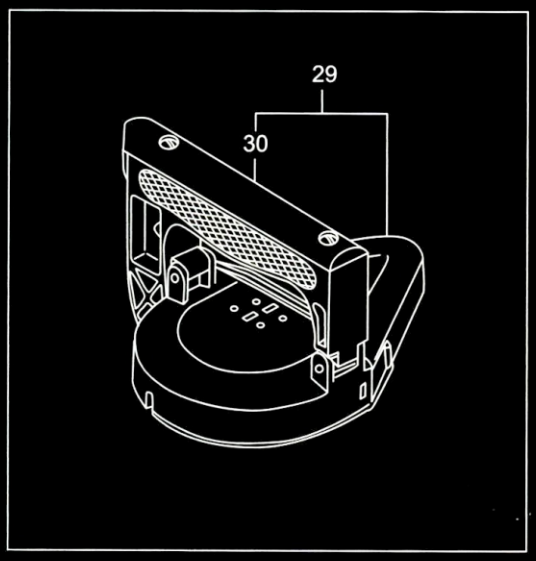

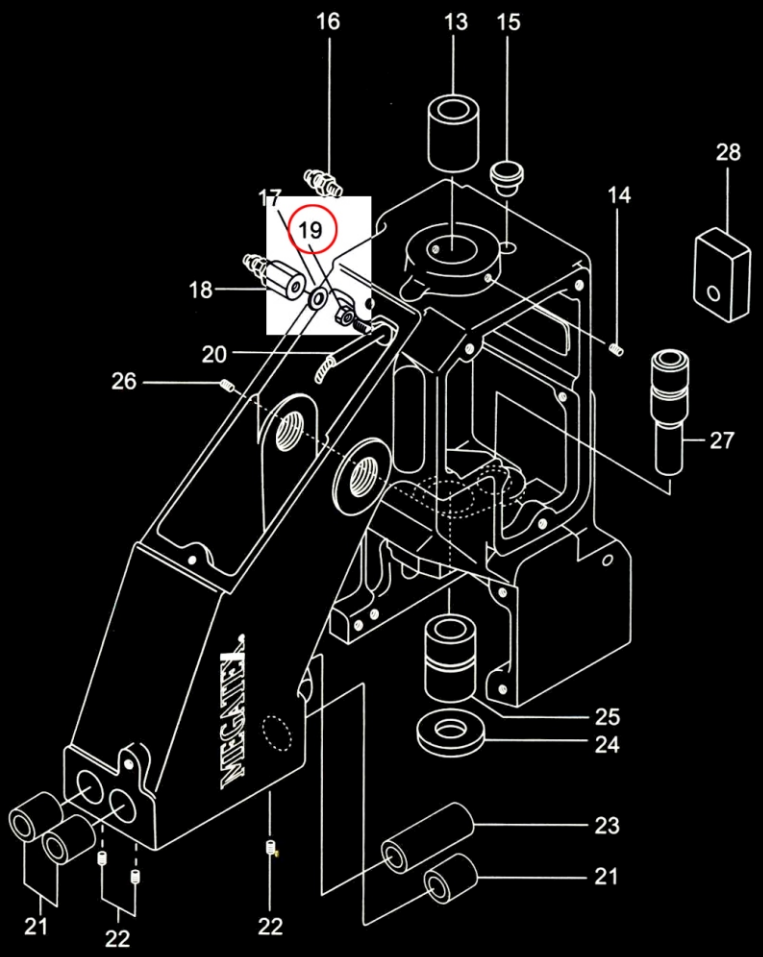

(2) Bushings, oilings and handle parts

ITEM	PART NO.	DESCRIPTION	Q'ty	REMARKS
1	6001201	HANDLE ASSEMBLY WITH OILER SWITCH	1	
2	6001202	HANDLE ASSEMBLY	1	
2-1	6001202-1	PIN	2	
2-2	6001202-2	COVER	1	
3	6001203	HANDLE	1	
3-1	6001203-1	COVER HANDLE	1	
4	6001016	SCREW, FOR 6001202	2	
5	6001205	MICRO SWITCH COVER CE	1	
6	6001206	MICRO SWITCH (Z-15GK655-B)	1	
6-2	6001206-2	END PLUG WIRE	1	
6-3	6001206-3	NUT WIRE	2	
7	6001207	FLEXIBLE TERMINAL BLOCK (ML-S-1, 4P) CE	1	
8	6001208N	OILER	1	
9	6001209	OIL TUBE, WITH OIL FELT (ϕ 6x95 L)	1	
10	6001210	OIL TUBE, WITH OIL FELT (ϕ 6x100 L)	1	
11	6001430	SCREW, FOR 6001208	1	
12	6001212	SCREW, FOR 6001202S	2	
12-1	6001212-1	WASHER	2	
13	6001213	MAIN SHAFT BUSHING, REAR	1	
14	6001214	SCREW, FOR 6001213	1	
15	6001215	RUBBER BUSHING	1	
16	6001216	JOINT	2	
17	6001217	WASHER	1	
18	6001218	JOINT	1	
19	6001219	NUT	1	
20	6001220	OIL PIPE	3	
21	6001221	BUSHING FOR PRESSER BAR NEEDLE BAR, UPPER	3	
22	6001222	SCREW, FOR 6001221	5	
23	6001223	PRESSER BAR BUSHING, LOWER	1	
24	6001224	OIL FELT	1	
25	6001225	MAIN SHAFT BUSHING, REAR	1	
26	6001222	SCREW, FOR 6001225	1	
27	6001227	LOOPER ROCKER SHAFT BUSHING	1	
28	6001228	OIL FELT	(1)	
29	6001229	HANDLE ASSEMBLY AND SWITCH	(1)	
30	6001230	HANDLE AND SWITCH		