PART №

6001819

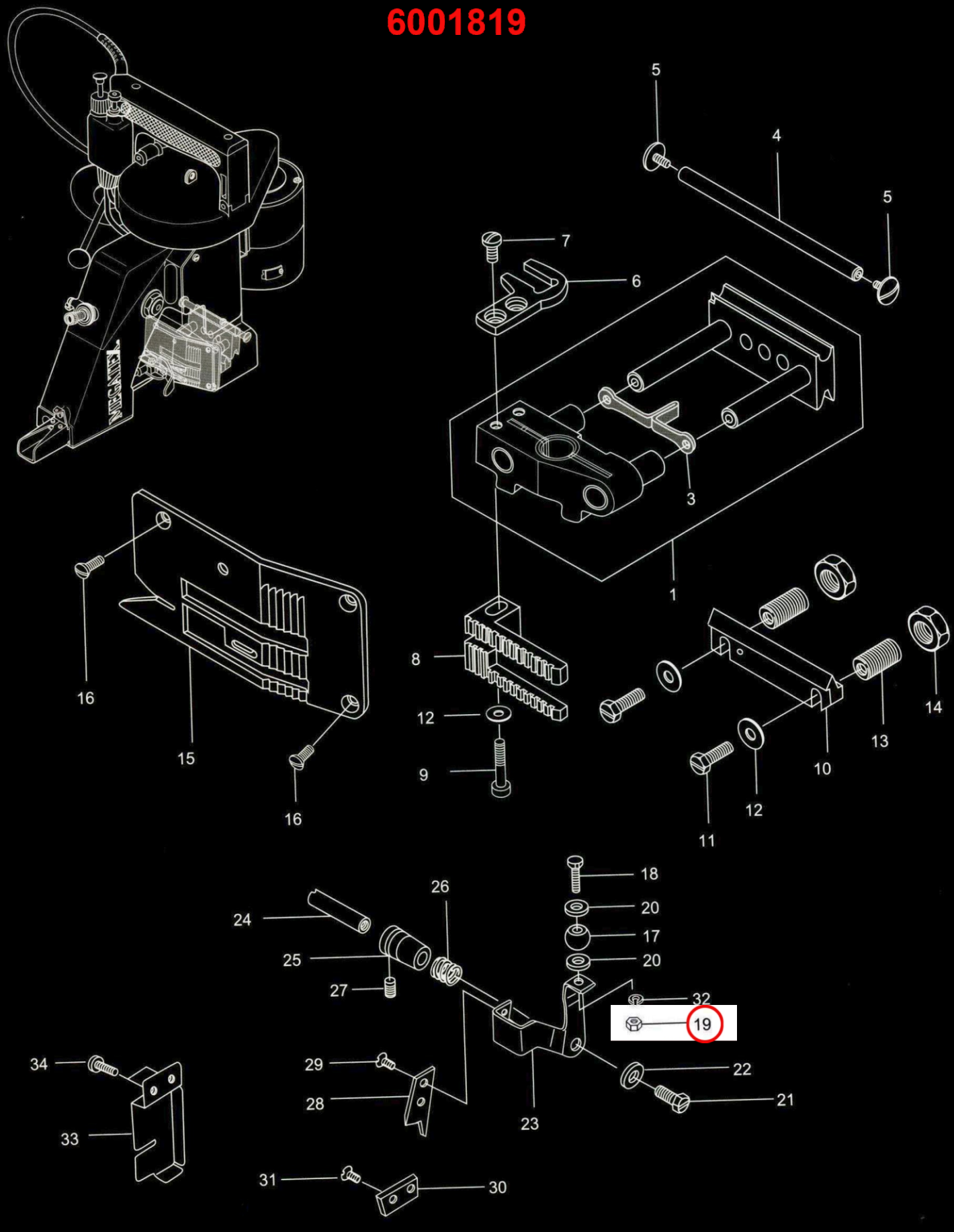

(5) Feed driving and thread cutter parts

ITEM	PART NO.	DESCRIPTION	Q'ty	REMARKS
1	6001801	FEED DOG CARRIER BLOCK ASSEMBLY	1	(2,3)
3	6001803	OIL FELT	1	
4	6001804	SLIDE BLOCK GUIDE STUD	1	
5	6001016	SCREW, FOR 6001804	2	
6	6001806	KNIFE BRACKET EXTENSION	1	
7	6001807	SCREW, FOR 6001806	2	
8	6001808	FEED DOG	1	
9	6001809	SCREW, FOR 6001808	1	
10	6001810	SLIDE BLOCK ADJUSTING	1	
11	6001811	LOCK BOLT, FOR 6001813	2	
12	6001416	WASHER, FOR 6001813	3	
13	6001813	STUD SLIDE BLOCK ADJUSTING SUPPORT	2	
14	6001814	LOCK NUT, FOR 6001813	2	
15	6001815	THROAT PLATE	1	
16	6001007	SCREW, FOR 6001815	3	
17	6001817	BALL	1	
18	6001818	BOLT, FOR 6001817 (M3X0.5X12 L)	1	
19	6001819	NUT, FOR 6001817 (M3X0.5)	1	
20	6001820	WASHER, FOR 6001817 (M3)	2	
21	6001821	SCREW, FOR 6001823	1	
22	6001416	WASHER, FOR 6001823	1	
23	6001823	KNIFE BRACKET	1	
24	6001824	KNIFE BRACKET PIN	1	
25	6001825	BUSHING, FOR 6001824	1	
26	6001826	KNIFE TENSION SPRING	1	
27	6001222	SCREW, FOR 6001825	1	
28	6001828	KNIFE MOVING	1	
29	6001829	SCREW, 6001828	2	
30	6001830	KNIFE STATIONARY	1	
31	6001829	SCREW, FOR 6001830	2	
32	6001832	SPRING LOCK WASHER (M3)	1	
33	6001833	KNIFE COVER	1	
34	6002017	SCREW, FOR 6001833	2	