PART №

6002002

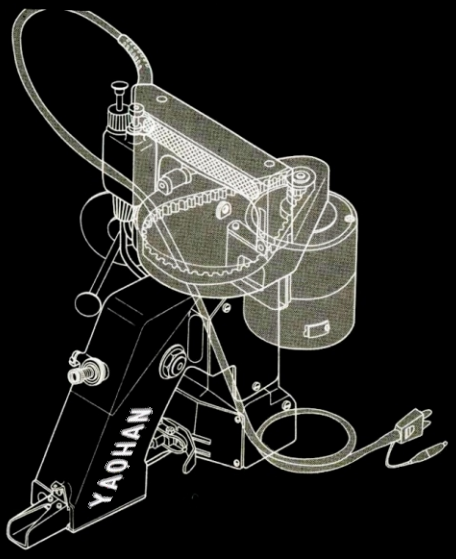

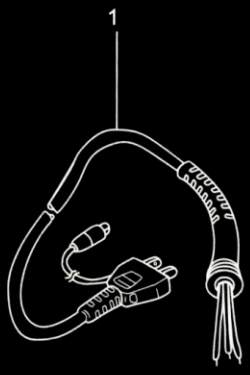

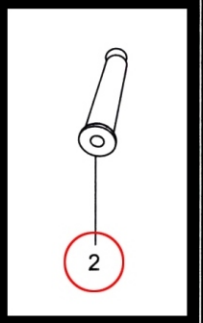

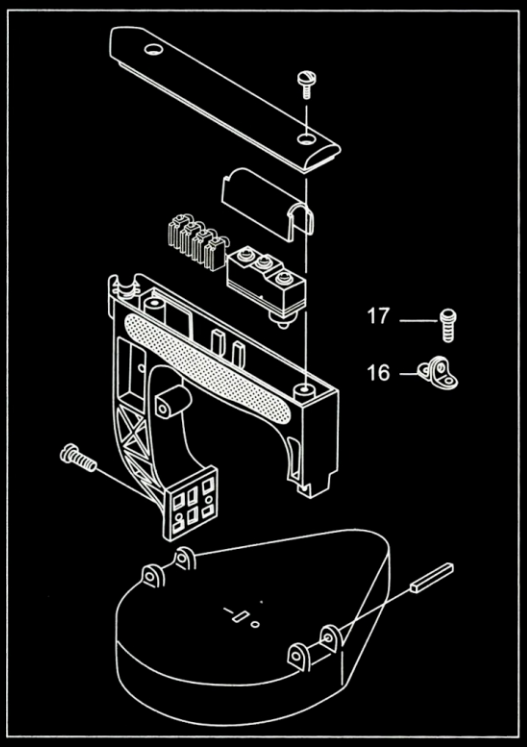

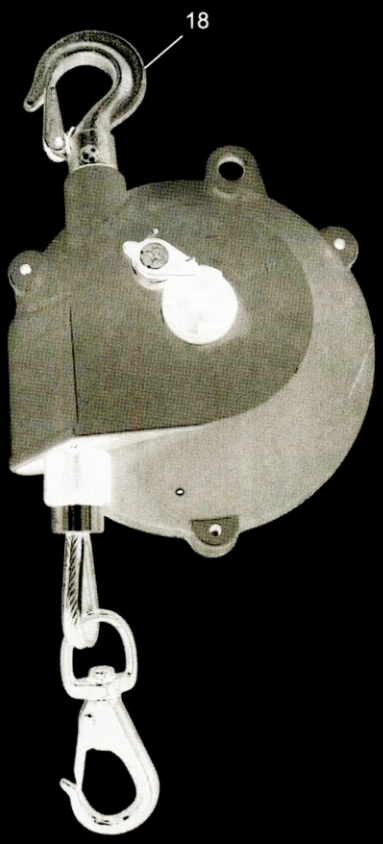

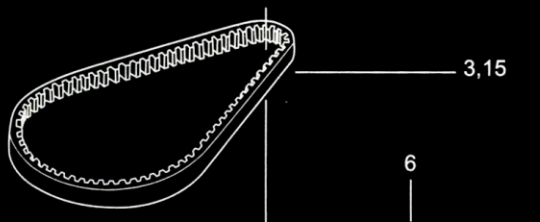

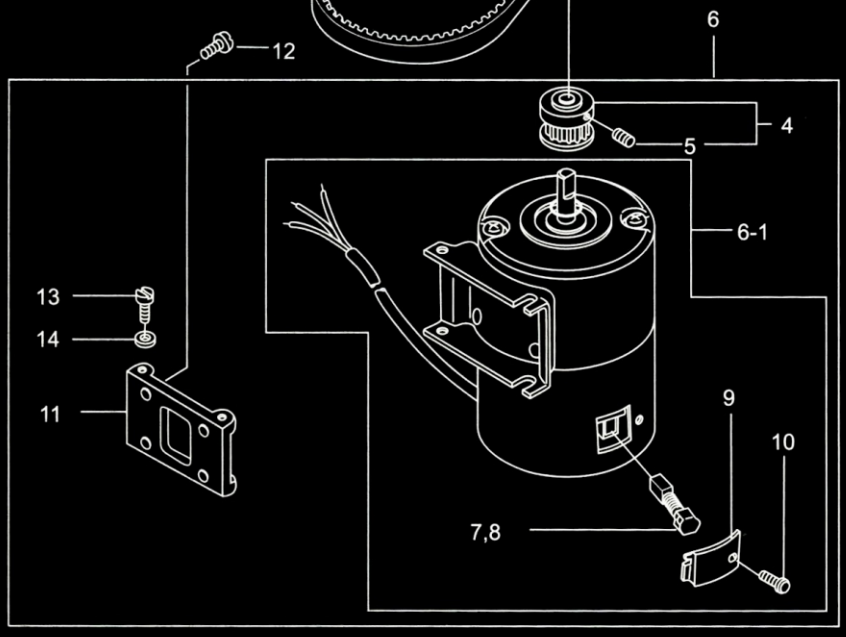

ITEM	PART NO.	DESCRIPTION	Q'ty	REMARKS
1	6002001	CABTYER CORD, WITH PLUG (PLANE TYPE) 110V	1	
	6002001-1	CABTYER CORD, WITH PLUG "CE"	1	
	6002001-2	CABTYER CORD, 220V	1	
	6002001-3	CABTYER CORD, WITH PLUG 12V		
2	6002002	RUBBER BUSHING	1	
3	6002003	TIMING BELT (160XL FOR N600H & N602H)	1	
4	6002004	MOTOR PULLEY	1	
5	6002005	SCREW, FOR 241083	2	
6	6002006	UNIVERSAL MOTOR ASM.(110V)	1	
	6002006-1	UNIVERSAL MOTOR ASM.(220V)	1	
	6002006-2	UNIVERSAL MOTOR ASM.(240V)	1	
	6002006-3	UNIVERSAL MOTOR ASM.(24V)	1	
	6002006-4	UNIVERSAL MOTOR ASM.(12V)	1	(5)
	6002006-5	UNIVERSAL MOTOR ASM.(110V SMALL)		
6-1	6002006M	UNIVERSAL MOTOR (110V)	1	
	6002006-1M	UNIVERSAL MOTOR (220V)	1	
	6002006-2M	UNIVERSAL MOTOR (240V)	1	
	6002006-3M	UNIVERSAL MOTOR (24V)	1	
	6002006-4M	UNIVERSAL MOTOR (12V)	1	(5)
	6002006-5M	UNIVERSAL MOTOR (110V SMALL)		
7	6002007	CARBON BRUSH, FOR AC MOTOR (SIZE:6X8X15)	2	(7,9,10)
8	6002008	CARBON BRUSH, FOR DC MOTOR 12V/24V (SIZE:6X8X15)	2	(7,9,10)
9	6002009	CAP	1	(8-10)
10	6002010	SCREW (WITH WASHER)	1	(8-10)
11	6002011-1	MOTOR BASE B FOR N600A & N602A	1	
	6002011-2	MOTOR BASE B FOR N600H & N602H (HIGH SPEED)	1	
12	6001212	SCREW	4	
13	6001415	SCREW	4	
14	6002014	WASHER, FOR MOTOR	4	
15	6002015	TIMING BELT (170XL FOR N600A & N602A)	1	
16	6002016	HANGER HOOK	1	
17	6002017	SCREW, FOR 6002016	2	
* 18	SB-5K	SPRING BALANCE FOR 3-5KGS.	1	
	SB-7K	SPRING BALANCE FOR 5-7KGS.	1	
	SB-9K	SPRING BALANCE FOR 7-9KGS.	1	